mm [inch]

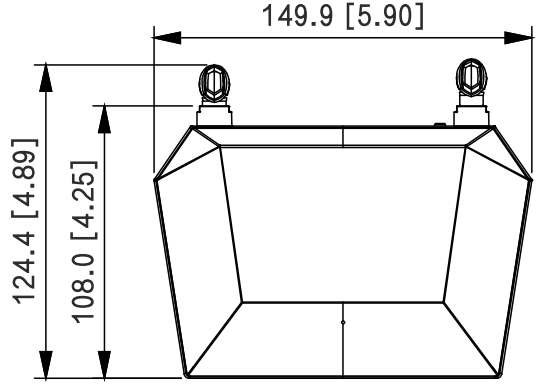
149.9 [5.90]
124.4 [4.89]
108.0 [4.25]

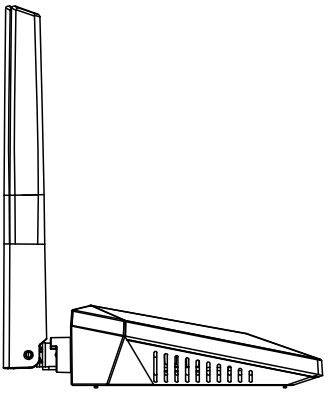

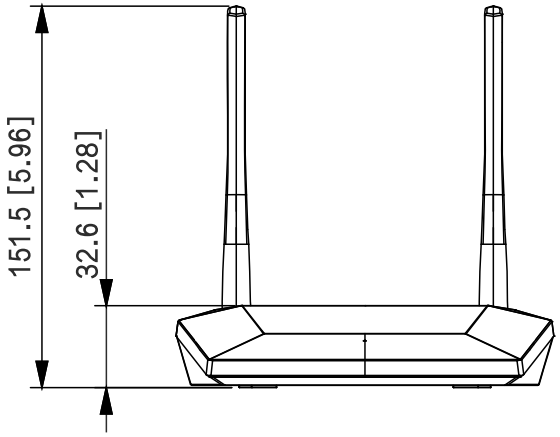
151.5 [5.96]
32.6 [1.28]

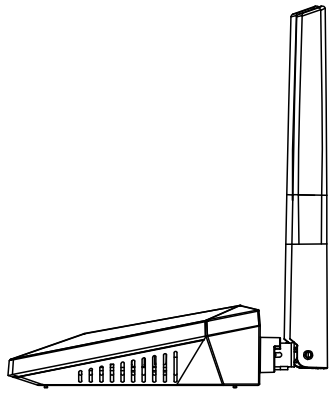

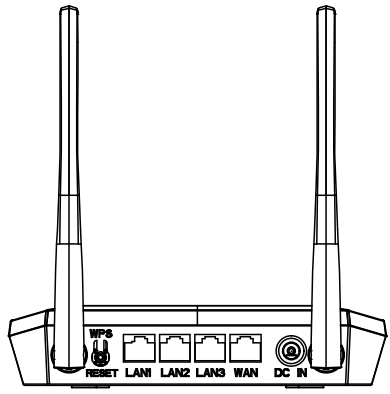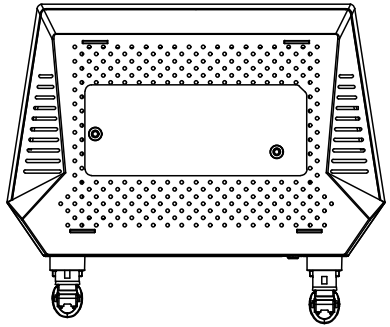
WPS
RESET
LAN1
LAN2
LAN3
WAN
DC IN