mm [inch]

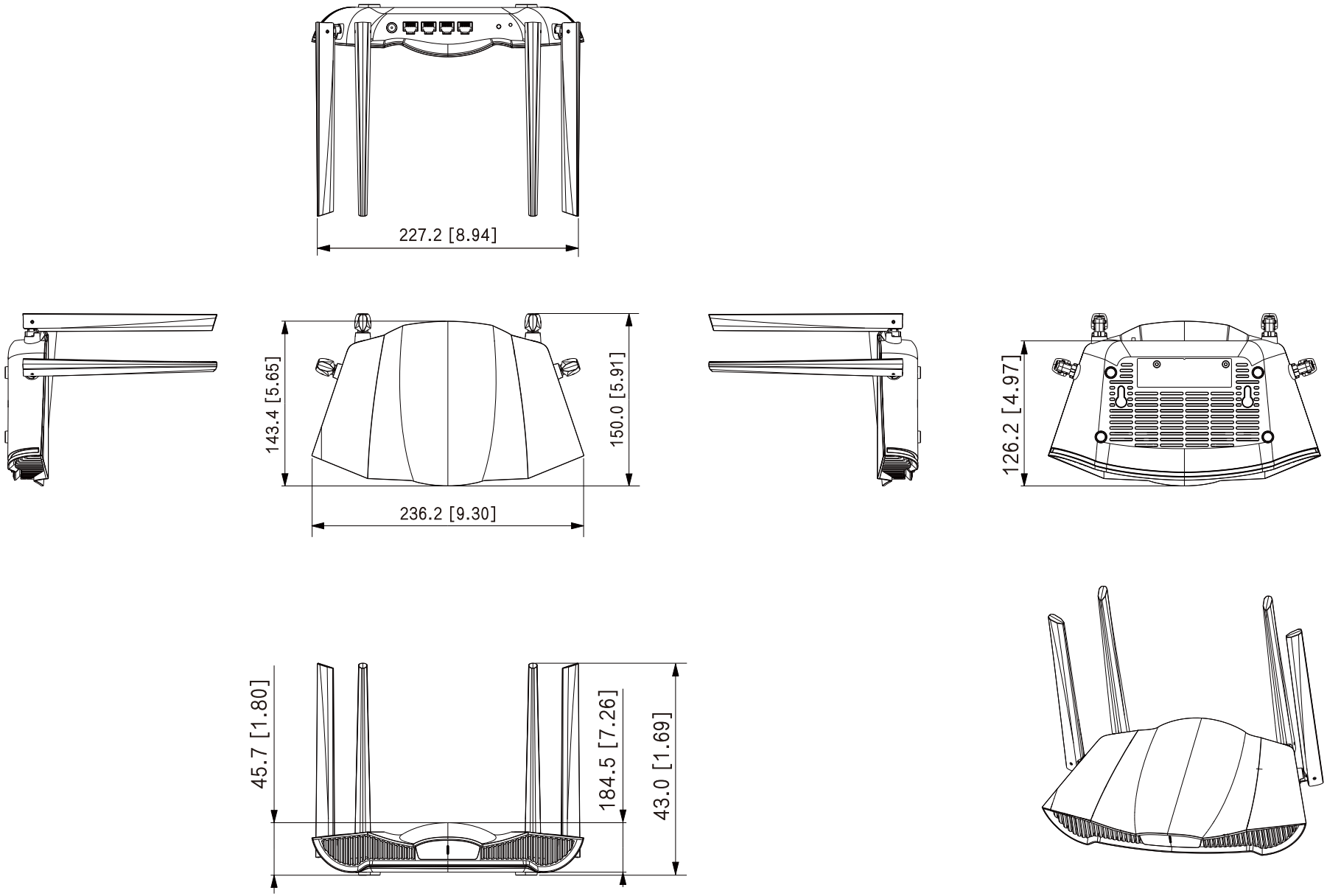
227.2 [8.94]
143.4 [5.65]
150.0 [5.91]
236.2 [9.30]
126.2 [4.97]
45.7 [1.80]
184.5 [7.26]
43.0 [1.69]