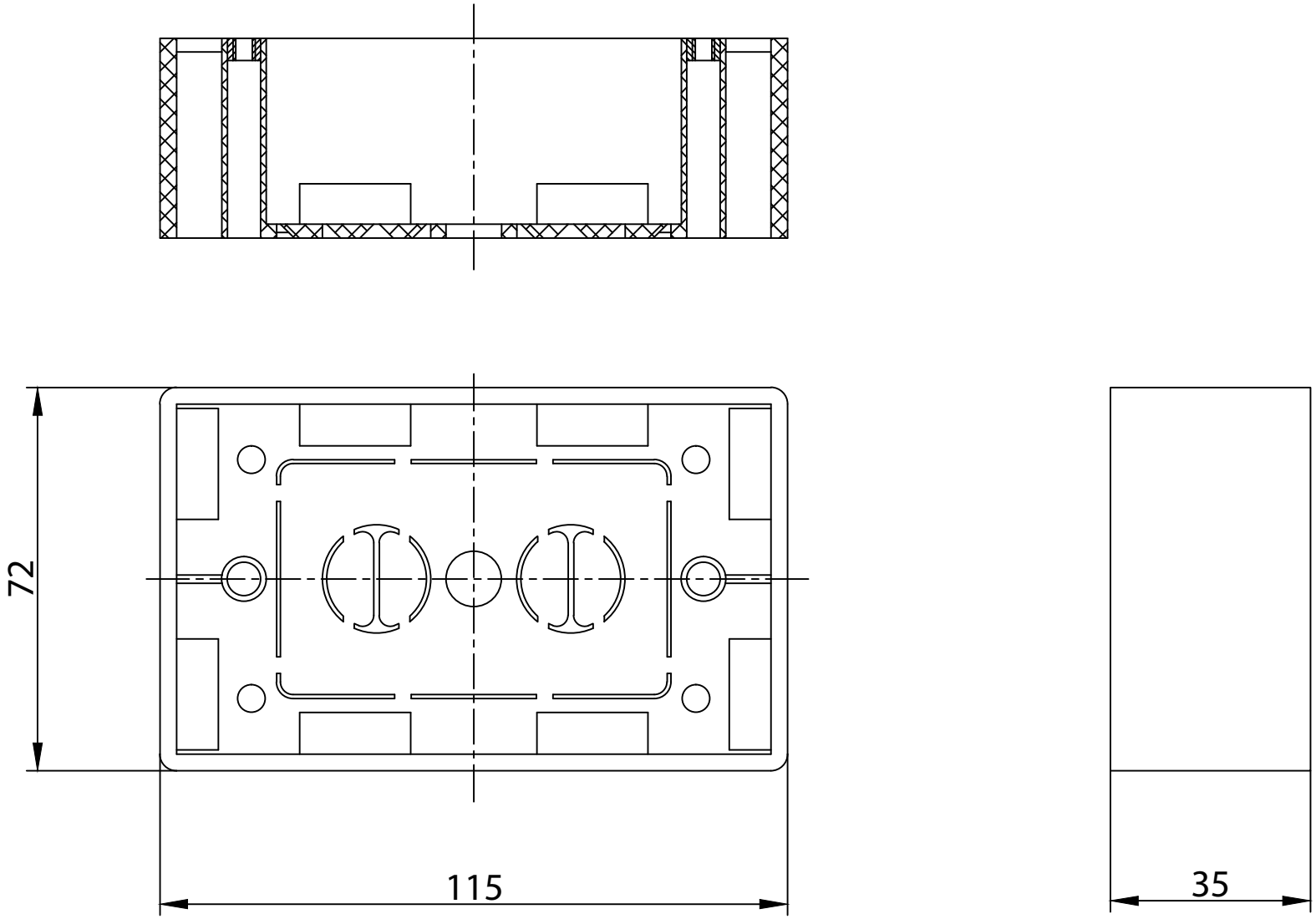

Material：
ABS

dLux			Tolerance: X. ±0.5 .X ±0.3 .XX ±0.10	SCALE: FREE	CUSTOMER:			Approved by
			Angle: X° ±3° .X° ±1°	UNIT: mm		CUSTOMER P/N: BOX-1753	COMPANY P/N:	Checked by
REV.	DESCRIPTION	DATE		REV.: 00	SHEET 1/1	DWG. No.:	TITLE: BackBox	Design by